ZUWA-Zumpe GmbH

Parts list UNISTAR 2001-C

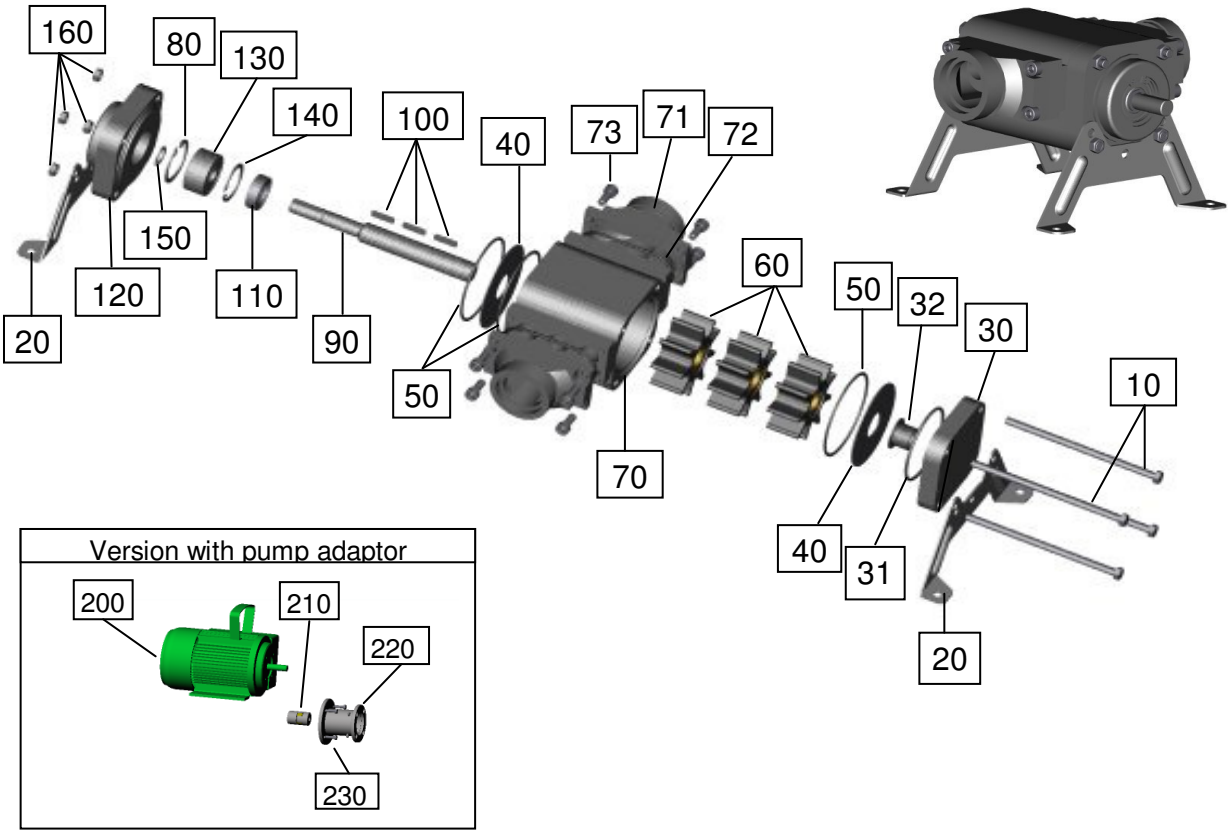

Parts list

Pos.:	Part / Designation	Code	Number
10	Hexagon head screw M5x105	70039	4
20	Pedestal	11012710	2
30	Front cover UNISTAR 2001-C/flide bushing	11012002GLC	1
31	O-Ring 54x2	800054N	1
32	flide bushing XFM 1416-12	141608	1
40	Wear plate with punched hole - stainless steel	11012709	2
50	O-Ring 56-2 NBR	80003	3
50	O-Ring 56-2 Viton	80150	3
50	O-Ring 56-2 EPDM	80151	3
60	Impeller Perbunan Typ A / stainless steel bush	11012908	3
60	Impeller Perbunan Typ A / polyamid bush	11012909	3
60	Impeller Kunststoff Typ A / polyamid bush	11012301	3
60	Impeller Neoprene Typ A / stainless steel bush	11012505	3
60	Impeller Viton Typ A / stainless steel bush	11012801	3
60	Impeller Viton Typ A / polyamid bush	11012810	3
60	Impeller EPDM Typ A / stainless steel bush	11012401	3
60	Impeller EPDM Typ A / polyamid bush	11012402	3
70	Housing UNISTAR-C	11013601	1
71	connection flange UNISTAR-C	11013602	2
72	O-Ring 50x2 NBR	80005	2
73	Hexagon cylinder scred M5x12	70329	8
80	Locking ring 30mm gal. Verzinkt	70305	1
90	Shaft long 10mm 2000-C/PT	11013005GLC	1
100	Feather key A3x3x16	70315	3

Parts list pump with adaptor

Pos.:	Artikel / Bezeichnung	Nummer	Anzahl
10	Hexagon head screw M5x110 (bei Pumpenträgerversion)	70038	4
110	Rotary shaft seal NBR für 10er Welle / 10x26x7	80142	1
111	Rotary shaft seal Viton für 10er Welle / 10x26x7	80414	1
112	Rotary shaft seal EPDM für 10er Welle / 10x26x7	80536	1
120	Rear cover UNISTAR 2000/PT	11012008PL	1
130	Ball yoint bearin S2200 2RS	80006	1
140	Locking ring I 26x1,2	70284	1
150	Locking ring A10	70307	1
160	Hexagon nut M5	70003	4
200	Motor 230V; 1,1 KW; 2800 U; R/L Lauf	80636	1
200	Motor 400V; 1,1 KW; 2800 U; R/L Lauf	7151MK6011	1
210	Rotex-coupling complete	141026	1
220	Pump adaptor	12000101	1
230	Hexagon socket head cap screw M6x16	70055	4
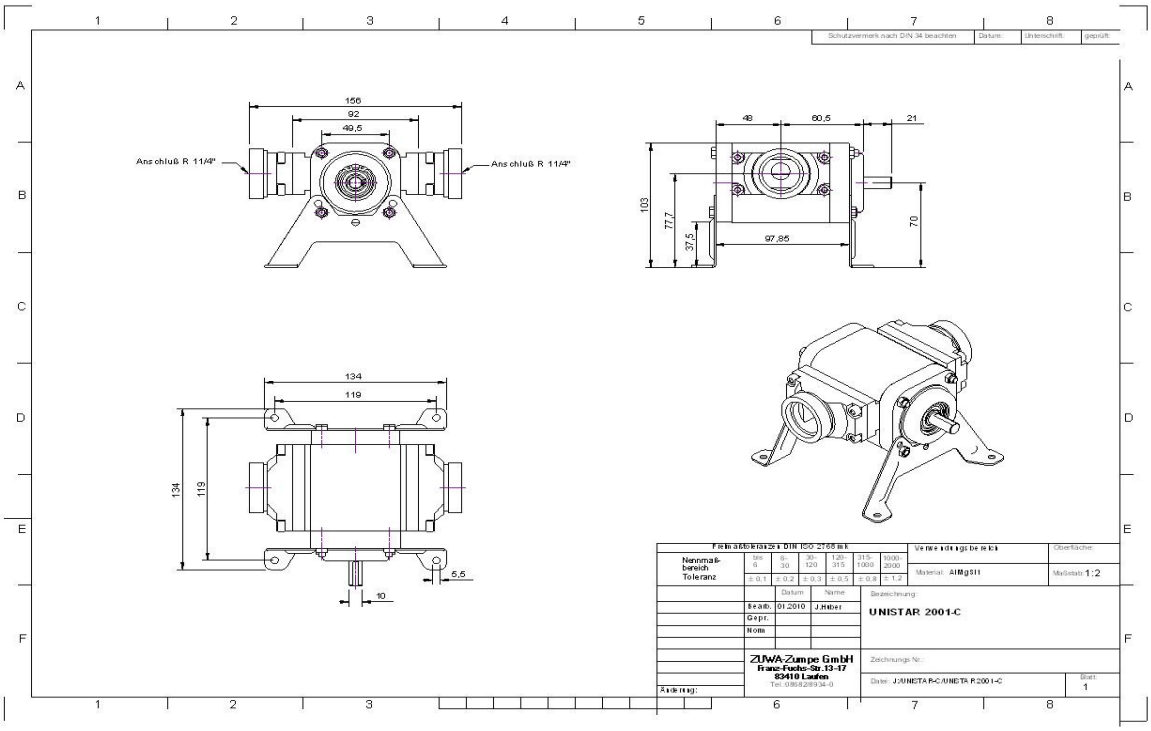
Dimensions UNISTAR 2001-C